amag

Innovating since 1957

BINDINGAGENTSPREADER

MS F-3 | MS R-5 | TS 1-8 | TS 2-12

http://amag.de

MOUNTEDSPREADER

HIGHLIGHTS

- **No control panel needed — output controlled by hydraulic flow**
- **Exact spreading of binding agent**
- **Variable working width**

- **Dust curtain at the metering shaft**
- **Filling from BigBag possible**
- **Wheel Loader version available**

© amag GmbH — innovating since 1957 — Subject to technical changes

Technical Data	MS F-3	MS F-3WL	MS R-5	MS R-5WL
Container	3m³		5m³	
Filling interface	3"			
Spreader Mechanism				
Dosing system	Aluminium			
Output quantity[1]	5 - 60 kg/m²			
Spreading width	2500 mm			
Unladen weight	890 kg		1090 kg	
Dimensions L x W x H	1.450 x 2.607 x 1.750m		1.650 x 2.610 x 1.900m	
Vehicle Requirements				
Attachment	CAT2	CAT2 / Wheel Loader	CAT3	CAT3 / Wheel Loader
Hydraulics / Power	60 l/min / >80ps			

[1] Output quantity varies dependant on binding agent density and vehicle speed

Equipment	MS F-3 / MS F-3WL	MS R-5 / MS R-5WL
Fill level indicator	□	
Infinitely variable spreading volume	■	
Variable spreading width 1/3 — 2/3 split	□	
Tool storage	■	
Closed design with access hatch / filling from the top	■	
Truck tarpaulin top	□	
Filling interface Storz, alternative on request FOC	■	
Filling interface 4” or 5”	□	
Paintwork	RAL 9001 cremeweiss	
Custom paintwork	□	

■ Standard □ Optional

© amag GmbH — innovating since 1957 — Subject to technical changes

MS F-3

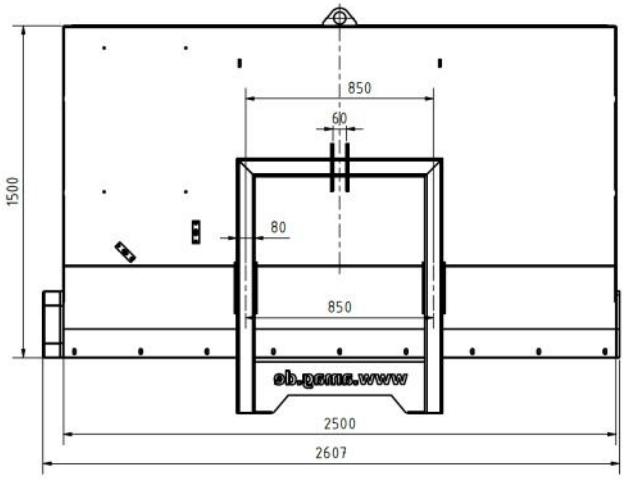

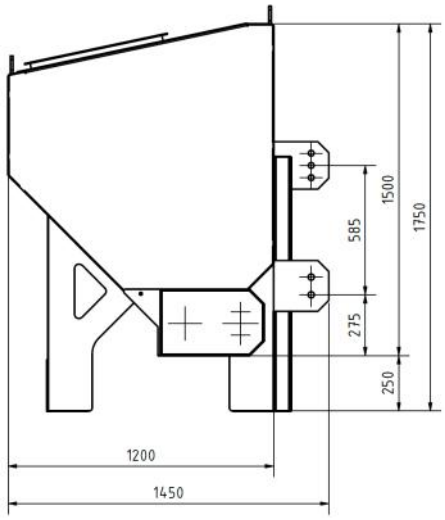

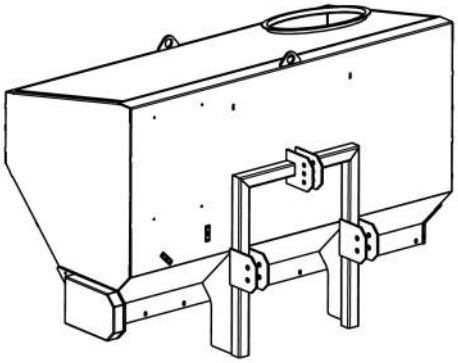

Front-mounted

3m³ capacity

MS R-5

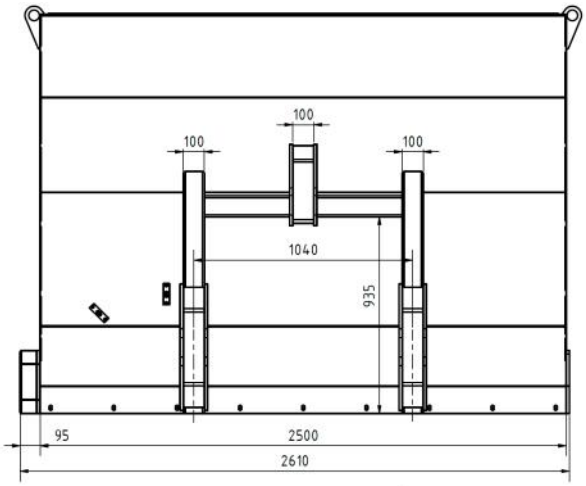

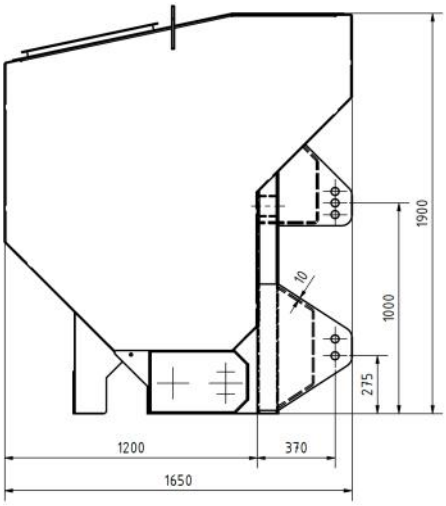

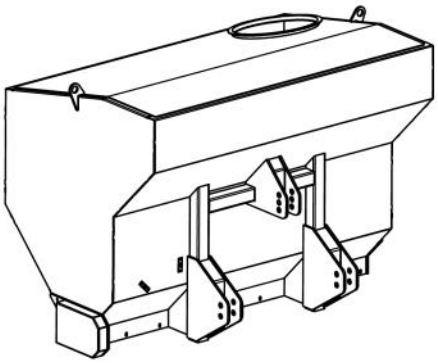

Rear-mounted

5m³ capacity

© amag GmbH — innovating since 1957 — Subject to technical changes

TOWEDSPREADER

HIGHLIGHTS

- **Fully hydraulic operation or in combination with PTO**
- **No control panel needed - output controlled by hydraulic flow**
- **Exact spreading of binding agent**

- **Variable working width left / right**
- **Dust curtain at the metering shaft**
- **Low maintenance screw conveyors**
- **Lowe centre of gravity — excellent stability**

© amag GmbH — innovating since 1957 — Subject to technical changes

Technical Data	TS 1-8	TS 2-12
Container	8m³	12m³
Filling interface	3"	
Screw conveyors	4	
Spreader Mechanism		
Dosing system	Aluminium	
Output quantity[1]	5 - 60 kg/m²	
Spreading width	2500 mm	
Axles	1	2
Unladen weight		4.900 kg
Dimensions L x W x H	5.950 x 2.610 x 2.800m	6.685 x 2.610 x 2.719m
Vehicle Requirements		
Attachment	K-80	
Hydraulics	60 l/min	
Power take-off (PTO)	540/1000 rpm	

[1] Output quantity varies dependant on binding agent density and vehicle speed

Equipment	TS 1-8 / 2-12
Fill level indicator	■
Infinitely variable spreading volume	■
Twin dosing roller	□
Fully hydraulic operation	□
Variable spreading width 1/3 — 2/3 split	□
Tool storage	■
Ladder	■
Access hatch / Filling from the top	■
Wide tyres AS profile	■
Filling interface Storz, alternative on request FOC	■
Filling interface 4” or 5”	□
Paintwork	RAL 9001 cremeweiss
Custom paintwork	□
Alternative trailer coupling	□

■ Standard □ Optional

© amag GmbH — innovating since 1957 — Subject to technical changes

TS 2-12

DIMENSIONS

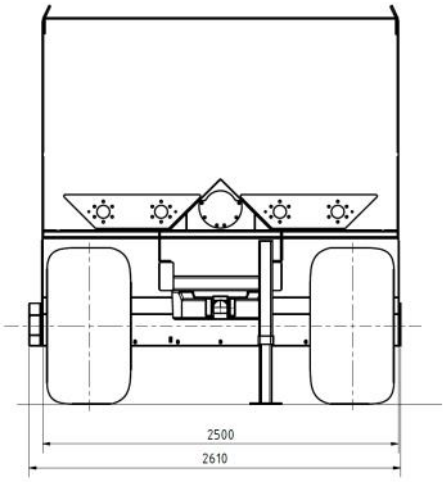

2 axles

12m³ capacity

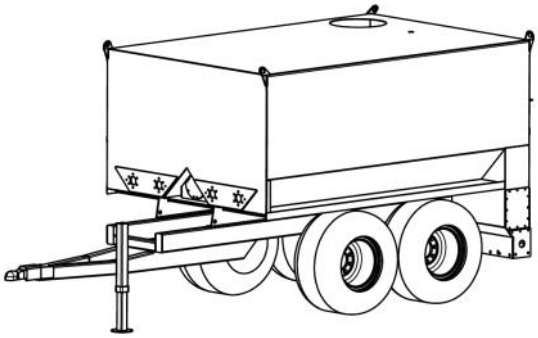

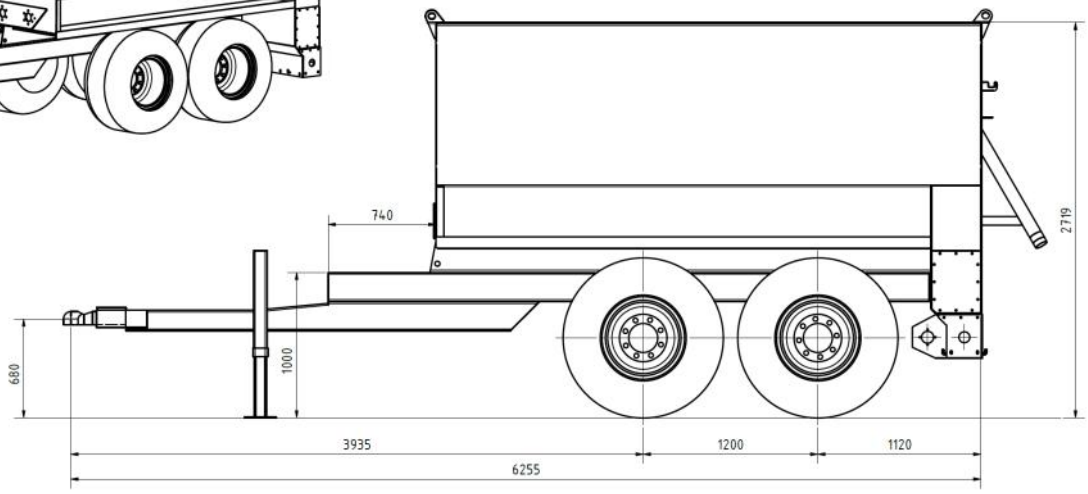

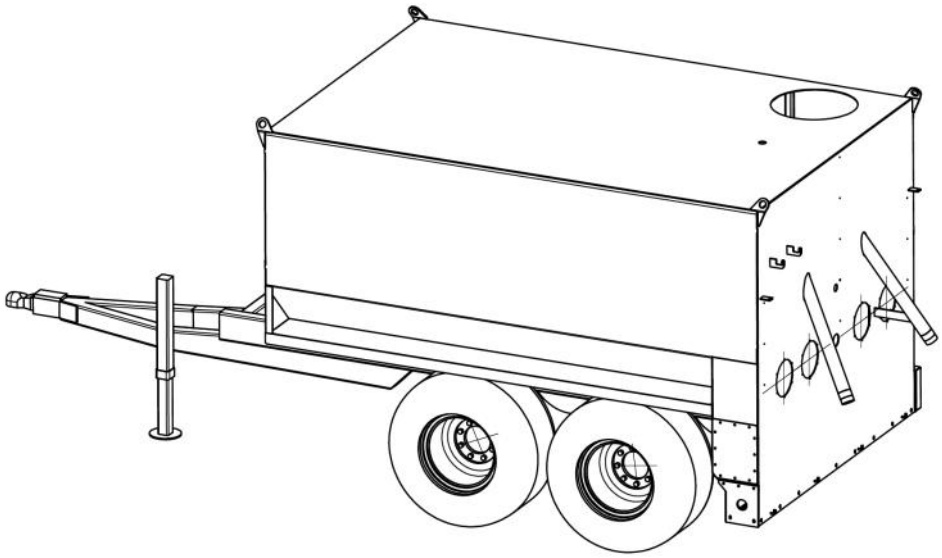

© amag GmbH — innovating since 1957 — Subject to technical changes

Innovating since 1957

amag GmbH
Hauptstrasse 100
56745 Bell
Germany

+49-2652-93936-0
info@amag.de
http://amag.de

amag-Bell **amagBell** **amag_gmbh**

© amag GmbH — innovating since 1957